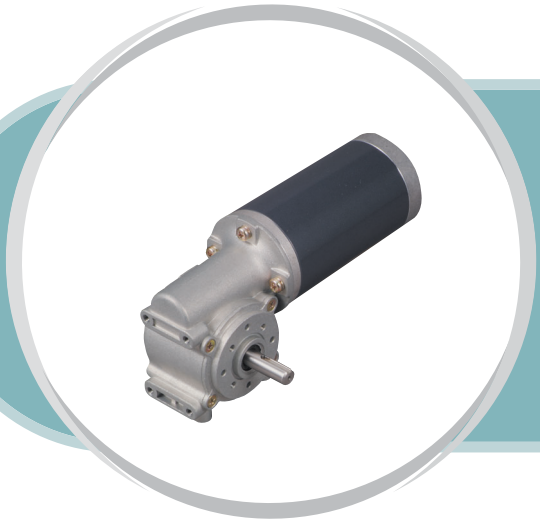

WORM GEARED TYPE

RA6 SERIES MOTOR

MOTOR DIMENSION

UNIT : mm[inch]

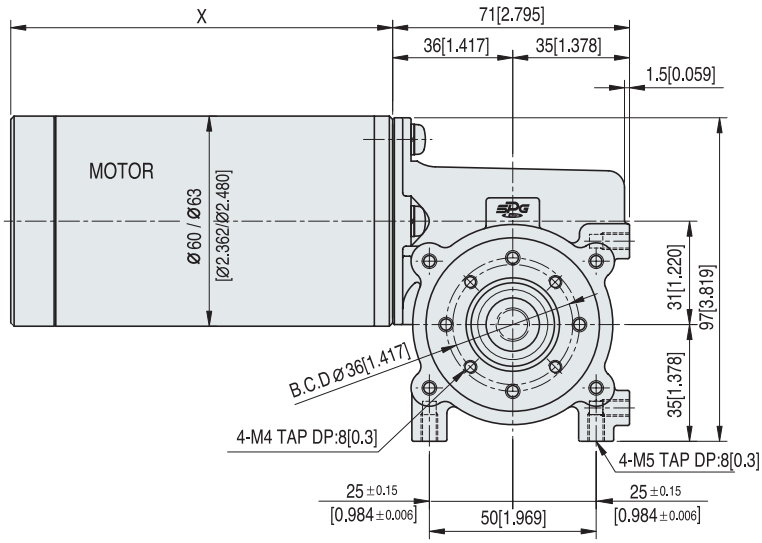

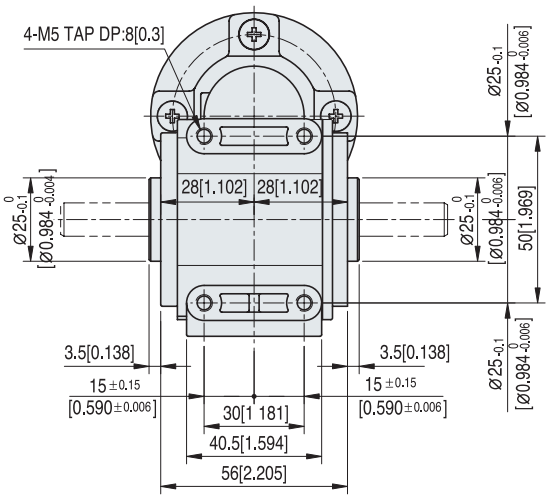

SHAFT TYPE			OUTPUT DIMENSION
STANDARD (Shaft on left)	SPECIAL (Shaft on rignt)	SPECIAL (Shaft on both)	
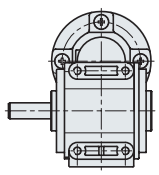	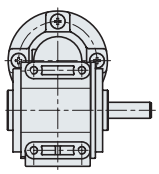	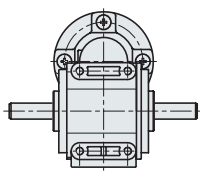	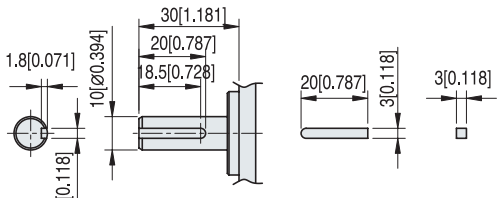

MOTOR SPECIFICATION

Gear Ratio	5	10	15	24	38	50	75
Output Speed(rpm)	740	370	247	154	97	74	49
Efficiency	0.7	0.65	0.55	0.5	0.4	0.35	0.25
Permissible Torque (kgf-cm)	40						
Weight of Gearbox (kg)	1						
Axial Load / Thrust Load (kgf)	30 / 35						